REVISIONS					
REV	DESCRIPTION	ECR	DRN BY	DATE	CHK
-	INITIAL RELEASE	XXX	JMR	3/24/23	XXX

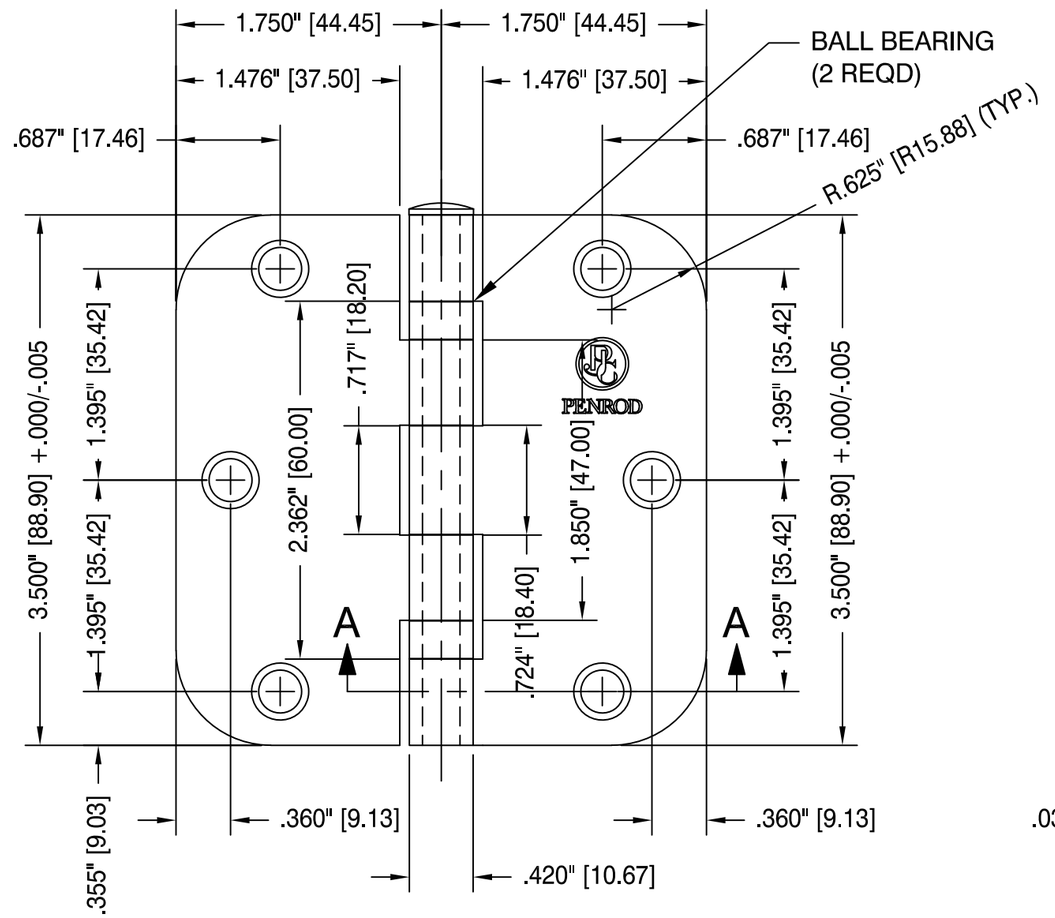

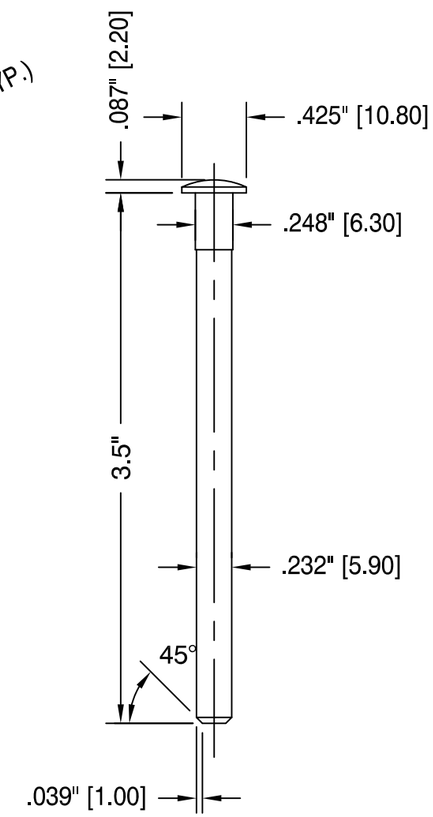

PIN

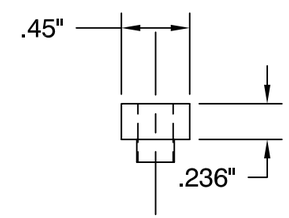

BEARING

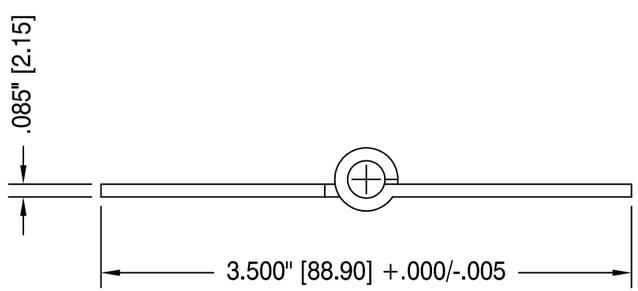

TOP VIEW - ASSEMBLED

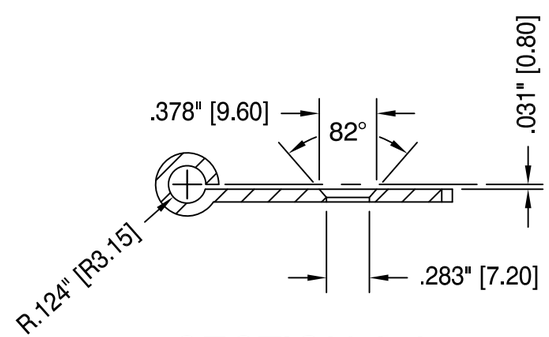

SECTION A-A

NOTES:

1. HINGES AND SCREWS TO BE INDIVIDUALLY CARTONED WITHIN A MASTER PKG CARTON.
2. EACH MASTER PKG CARTON TO CONSIST OF 96 HINGES AND (576) #9 x 3/4" SCREWS.
3. HINGES PACKED IN INNERS OF 3 WITH (18) #9 x 3/4" SCREWS.
4. HINGE COMPLIES WITH ANSI/BHMA A156.1.
5. DIMENSION TOLERANCES ARE NOT ACCUMULATIVE.

PACKAGING AVAILABLE:

BULK, 100 PER MASTER
BOXED, 2 PIECES PER INNER W/ SCREWS, 50 INNERS PER MASTER

ASSEMBLY:

ASSEMBLED
UNASSEMBLED, PACKED BY LEAF W/ BOX OF PINS

PENROD
thepenrodcompany.com

DRW: J. ROONEY
CHK: YONG ZOU
APV: BRIAN POWERS

TOLERANCES UNLESS OTHERWISE SPECIFIED

DECIMAL
.XX = +/- .03
.XXX = +/- .005

FRACTION
+/- 1/64

ANGLE
+/- 1°

NOTICE
THE USE OF PROPRIETARY INFORMATION CONTAINED HEREON OR REPRODUCTION OF SAME SHALL BE UNDERSTOOD AND AGREED TO BE FOR THE CONVENIENCE OF REFERENCE ONLY. IT SHALL BE FURTHER AGREED THAT THE PATENT RIGHTS AND/OR IMPROVEMENTS CANNOT BE CONSTRUED AS TRANSFERRED OR CONVEYED UNLESS AGREED TO IN WRITING BY A DULY AUTHORIZED OFFICER OF THE PENROD COMPANY.

TITLE:
3.5" x 3.5"
5/8" Radius x 5/8" Radius
ASSEMBLED BALL BEARING BOXED

SIZE	INDEX NO.	DWG NO.	REV
B	'	3535007	-

SCALE: FULL | DATE: 3/24/23 | SHEET 1 OF 1